Hardware Fitting Instructions

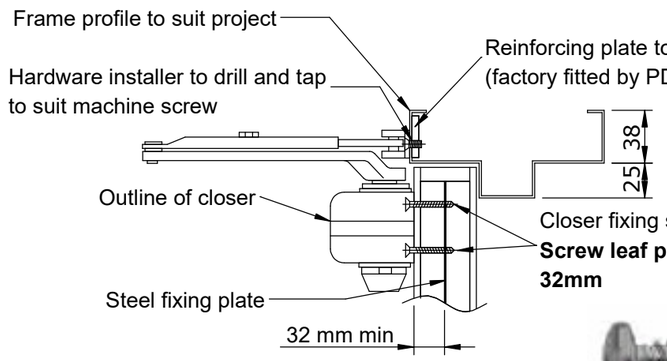

Section
Closer connectionto frame and Door leaf standard mounting



Do not use wing tip screws



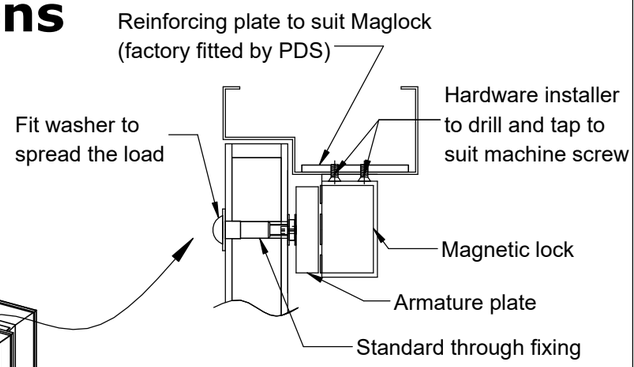

Section
Magnetic lock mounting under slung

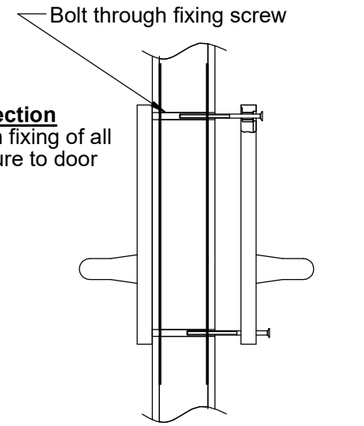

Section
Through fixing of all Furniture to door

VPxx series fire doors (excluding VPxxA) have a fixing plate provided within the leaf during construction for the closer to fix to

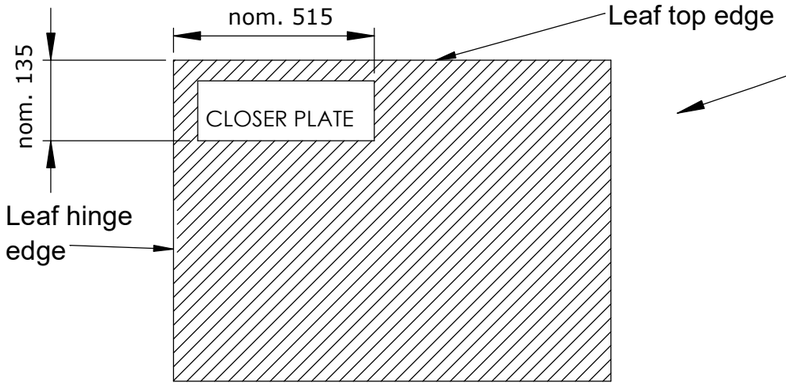

Some closer makes / models / mounting configurations require the use of an adaptor plate to ensure their fixings coincide with this fixing plates. This is the responsibility of your hardware trade. Screws shall be self-tapper (not wing tipped) and penetrate the leaf by a minimum of 32 mm. High traffic or oversize door leafs may require the use of bolt through fixing.

Doorstops or similar travel-limiting devices shall be located to minimise straining and racking of the door leaf. This is covered in NZS4520 5.4.1 but is a practical consideration for all door sets.
They should be aligned with the point where opening force is applied (e.g. handle or push plate).

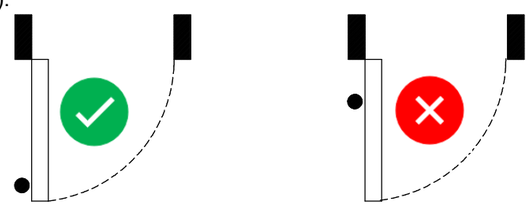

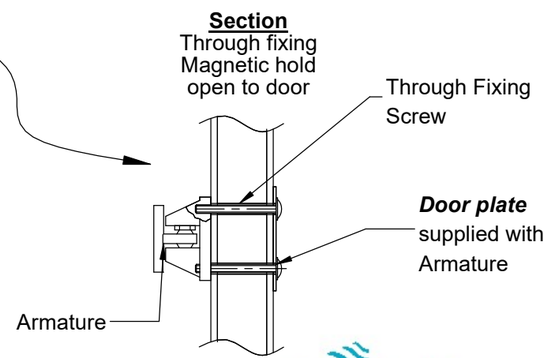

Section
Through fixing
Magnetic hold
open to door

THIS DOCUMENT IS THE PROPERTY OF PACIFIC DOOR SYSTEMS LIMITED AND MUST NOT BE COPIED OR REPRODUCED WITHOUT THE EXPRESS PERMISSION OF PACIFIC DOOR SYSTEMS LIMITED.

PacificDoors
ASSA ABLOY

Hardware Fitting Instructions

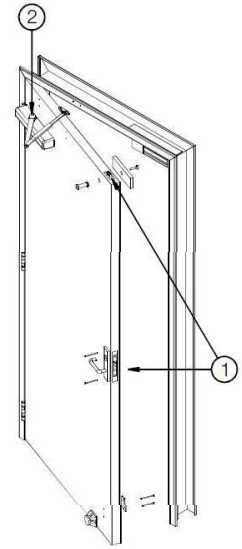

HINGED, SINGLE DOOR

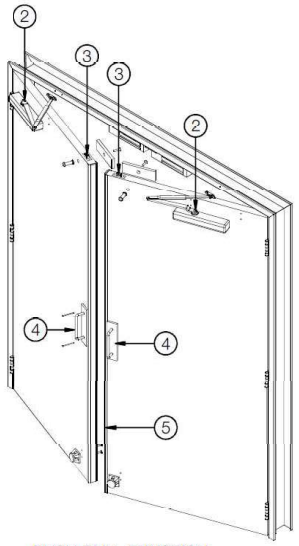

PUSH-PULL FUNCTION

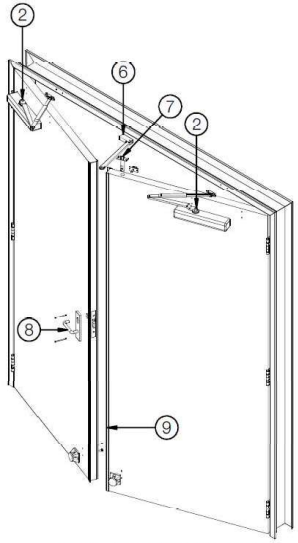

ACTIVE-INACTIVE FUNCTION

HINGED, PAIR DOORSET

1. Latching is required(Self-latching device),minimum of an Approved Roller Latch
2. Door closer
3. Approved Roller Catch
4. Push Plate / Pull Handles
5. Non-Rebated Meetingstile (Square or Bullnose)
6. Sequence Selector
7. Autolatch or Snib Latch
8. Mechanical Latchset
9. Rebated Meeting Stile or J-Section

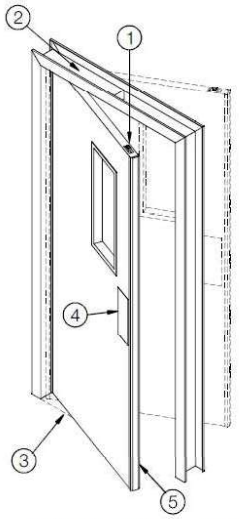

DOUBLE ACTION, SINGLE DOOR

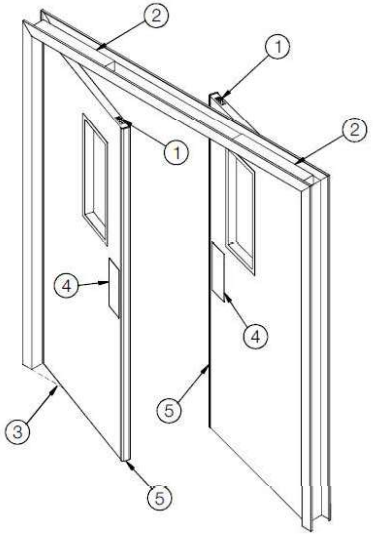

DOUBLE ACTION, PAIR DOORSET

1. Latching is required (Self-latching device), minimum of an approved Roller Latch
2. Transom Door closer
3. Floor springs (alternative to Transom Closer, not recommended in hospital doorsets)
4. Push Plates
5. Non-Rebated Meeting stile (Bullnose)

PacificDoors

ASSA ABLOY

THIS DOCUMENT IS THE PROPERTY OF PACIFIC DOOR SYSTEMS LIMITED AND MUST NOT BE COPIED OR REPRODUCED WITHOUT THE EXPRESS PERMISSION OF PACIFIC DOOR SYSTEMS LIMITED.